IP68 - Prensaestopa metálica / *Metal cable glands*

Garras que proporcionan un excelente sellado y adaptación a cables de sección no circular

Claws shape provides large sealing area and excellent adaptation to cables with non-circular section

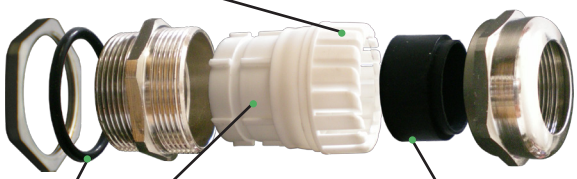

Junta tórica de sellado

O-ring offers ideal sealing

Sistema anti-rotación

Anti-rotation system

Junta de sellado resistente a productos químicos

VSeal gasket resistant to chemicals

PRENSAESTOPA METALICA (métrica) IP68
METAL CABLE GLANDS (metric) IP68

Referencia *Reference*	AG (M)	GL (mm)	H (mm)	Llave *Spanner*	Rango de cable *Cable range* (mm)
ATMM12	M12x1,5	5,0	19,0	14	3,0 ~ 6,5
ATMM16	M16x1,5	6,0	20,0	17	4,0 ~ 8,0
ATMM20	M20x1,5	6,0	22,0	22	6,0 ~ 12,0
ATMM25	M25x1,5	7,0	25,0	30	13,0 ~ 18,0
ATMM32	M32x1,5	8,0	29,0	40	18,0 ~ 25,0
ATMM40	M40x1,5	8,0	35,0	50	22,0 ~ 32,0
ATMM50	M50x1,5	9,0	37,0	57	32,0 ~ 38,0
ATMM63	M63x1,5	10,0	38,0	68	37,0 ~ 44,0

PRENSAESTOPA METALICA (PG) IP68
METAL CABLE GLANDS (PG) IP68

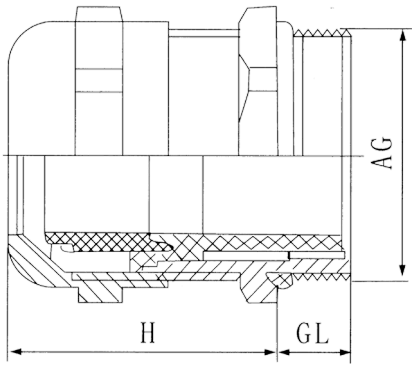

Referencia *Reference*	AG (PG)	GL (mm)	H (mm)	Llave *Spanner*	Rango de cable *Cable range* (mm)
ATMPG07	PG7	5,0	19,0	14	3,0 ~ 6,5
ATMPG09	PG9	6,0	20,0	17	4,0 ~ 8,0
ATMPG11	PG11	6,0	21,0	20	5,0 ~ 10,0
ATMPG13	PG13,5	6,5	22,0	22	6,0 ~ 12,0
ATMPG16	PG16	6,5	23,0	24	10,0 ~ 14,0
ATMPG21	PG21	7,0	25,0	30	13,0 ~ 18,0
ATMPG29	PG29	8,0	29,0	40	18,0 ~ 25,0
ATMPG36	PG36	8,0	35,0	50	22,0 ~ 32,0
ATMPG42	PG42	9,0	37,0	57	32,0 ~ 38,0
ATMPG48	PG48	10,0	38,0	64	37,0 ~ 44,0